CTGP
91°

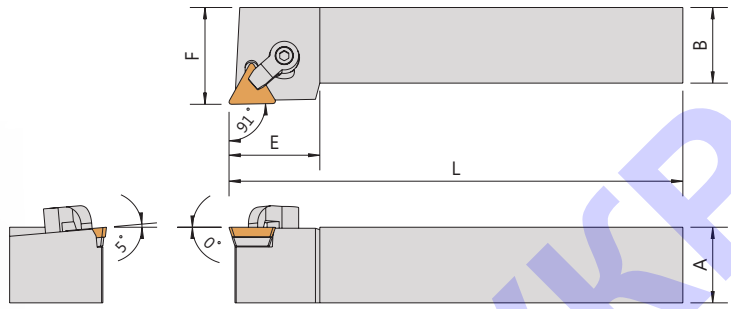

Order No.	Insert	Dimensions					Parts				Wrench
Right / Left	△	A	B	L	E	F					
CTGPR/L-1212F11	TPMN1103	12	12	80	20	16	—	—	CP50-21	CS7-5015	LW025
CTGPR/L-1616H11	TPMN1103	16	16	100	20	20	—	—	CP50-21	CS7-5015	LW025
CTGPR/L-2020K16	TPMN1603	20	20	125	30	25	SMT-321	CS20045	CP50-22	CS7-6024	LW030
CTGPR/L-2525M16	TPMN1603	25	25	150	30	32	SMT-321	CS20045	CP50-22	CS7-6024	LW030

CTFP
91°

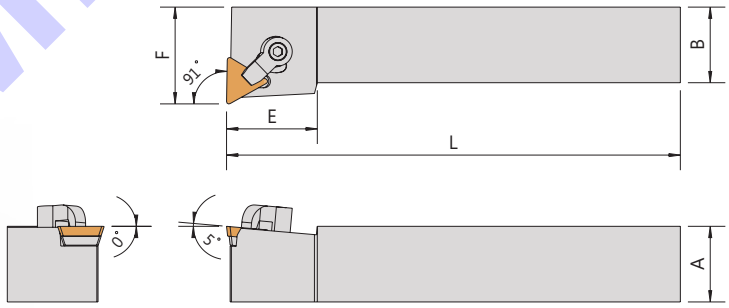

Order No.	Insert	Dimensions					Parts				Wrench
Right / Left	△	A	B	L	E	F					
CTFPR/L-1616H11	TPMN1103	16	16	100	20	20	—	—	CP50-21	CS7-5015	LW025
CTFPR/L-2020K16	TPMN1603	20	20	125	30	25	SMT-321	CS20045	CP50-22	CS7-6024	LW030
CTFPR/L-2525M16	TPMN1603	25	25	150	30	32	SMT-321	CS20045	CP50-22	CS7-6024	LW030

ІНСТРУМЕНТИ.УКР